INTI International University & Colleges

FINAL

Examination Paper

(COVER PAGE)

Session	:	**August 2018**
Programme	:	Diploma in Mechanical Engineering (DMEN)
Course	:	**PHY1121 : Physics**
Date of Examination	:	December 13, 2018 (Thursday)
Time	:	11:00 am – 1:00 pm Reading Time : Nil
Duration	:	2 Hours
Special Instructions	:	

This paper consists of **FIVE (5)** questions. Answer any **FOUR (4)** questions in the answer booklet provided. All questions carry equal marks.

Materials permitted : Non-programmable Scientific Calculator

Material provided : Physics Booklet

Examiner	:	**Manickampraslad M. Sambasivam** & Chong Mee Teng
Moderator	:	Dr Chong Tet Vui

This paper consists of 6 printed pages, including the cover page.

DIPLOMA IN MECHANICAL ENGINEERING PROGRAMME (DMEN)
PHY1121: PHYSICS
FINAL EXAMINATION: AUGUST 2018 SESSION

Instructions: This paper consists of **FIVE (5)** questions. Answer any **FOUR** questions in the answer booklet provided. All questions carry equal marks.

Question 1

(a) The weight of the intake valve of an auto engine is 0.18 lb. If 1 lb = 4.45 Oz and 4.45 Newtons, convert its weight into:-

(i) Ounces, and (1 mark)

(ii) Newtons. (1 mark)

(b) A train is slowing to a stop with an average acceleration of -3.0 m/s^2. If its initial velocity is 30.0 m/s, calculate the distance it travel in the first 4.00 s.

(3 marks)

(c) Find the value of $\frac{(58.0\text{ kg})(2.40\text{ m/s})^2}{5.40\text{ m}}$ Round the answer into 3 significant figures. Carefully simplify the units. Show all the working properly.

(3 marks)

(d) A ship travels 105 km from port on a course of 55.0° west of north to an island. Then it travels 124 km due west to a second island. Then it travels 177 km on a course of 24.0° east of south to a third island. Find the displacement from the starting point to the ending point.

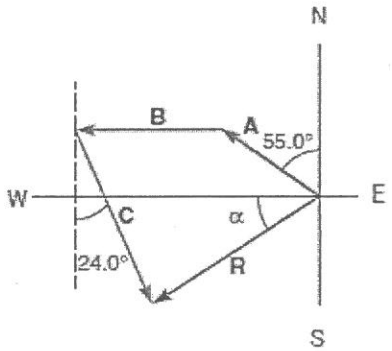

Figure Q1(d)

(9 marks)

(e) The velocity of an object as a function of time is given by $v(t) = 2.00\text{ m/s} + (3.00\text{ m/s}^2)\,t - (1.0\text{ m/s}^2)\,t^2$.

(i) Determine the instantaneous acceleration of the object at time $t = 5.00$ s. (3 marks)

(ii) Find the average acceleration over the first 5.00 s seconds. (5 marks)

Question 2

(a) A child throws a ball with an initial speed of 8.00 m/s at an angle of 40.0° above the horizontal. The ball leaves her hand 1.00 m above the ground and experience negligible air resistance.

(i) How long is the ball in flight before it hits the ground? (2 marks)

(ii) How far from where the child is standing does the ball hit the ground? (2 marks)

(b) Two objects with masses of 3.00 kg and 5.00 kg are connected by a light string that passes over a frictionless pulley, as shown in Figure Q2(b). Determine:

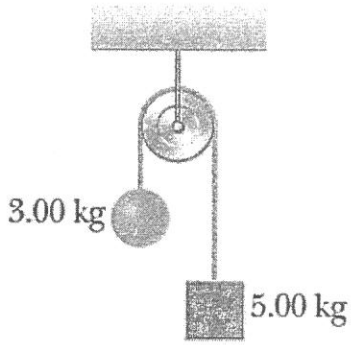

Figure Q2(b)

(i) the acceleration of each object, and (5 marks)

(ii) the tension in the string. (2 marks)

(c) A satellite is in a circular orbit around the Earth at an altitude of 2.80×10^6 m. Find:

(i) the period of the orbit, (4 marks)

(ii) the linear speed of the satellite, and (2 marks)

(iii) the acceleration (magnitude and direction) of the satellite. (3 marks)

(d) A 0.200 kg block of copper at a temperature of 90 °C is dropped into 0.400 kg of water at 27 °C. The water is contained in a 0.300 kg glass container. Determine the final temperature of the mixture. (Given the specific heat capacity of copper, $c_{cu} = 387$ Jkg^{-1} °C^{-1}, the specific heat capacity of water, $c_w = 4186$ Jkg^{-1}°C^{-1} and the specific heat capacity of glass, $c_g = 837$ Jkg^{-1}°C^{-1}) (5 marks)

Question 3

(a) A soccer ball is hit and moves initially at an angle of 35° above the horizontal ground with a velocity of 25.0 m/s as shown in Figure Q3 (a). Calculate:

Figure Q3 (a)

(i) the vertical and horizontal components of the initial velocity of the ball. (3 marks)

(ii) the total time of the ball be in the air. (3 marks)

(iii) the range for this projectile. (2 marks)

(b) A 17.5 g bullet fired at a muzzle velocity of 582 m/s from a gun with a mass of 8.00 kg and a barrel length of 75.0 cm.

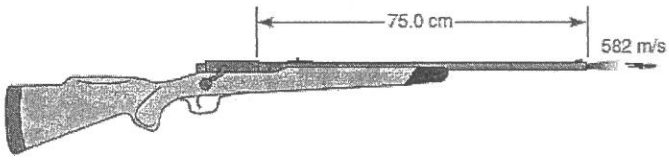

Figure Q3 (b)

(i) Calculate the time of the bullet moves in the barrel. (2 marks)

(ii) Calculate the force on the bullet while it is in the barrel. (2 marks)

(iii) Calculate the impulse exerted on the bullet while it is in the barrel. (2 marks)

(iv) Calculate the bullet's momentum as it leaves the barrel. (1 mark)

(c) A hollow aluminum cylinder 20.0 cm deep has an internal capacity of 2.00 L at 20.0 °C. It completely filled with turpentine at 20.0 °C. The turpentine and the aluminum cylinder then slowly warmed together to 80.0 °C. (Given the coefficient of linear expansion of aluminium, $\alpha = 24 \times 10^{-6}$ °C^{-1} and the coefficient of volume expansion of turpentine, $\beta = 9 \times 10^{-4}$ °C^{-1}. Determine the turpentine overflows. (6 marks)

(d) Gas confined in a tank at a pressure of 11.0 atm and a temperature of 25.0 °C. If two-thirds of the gas is withdrawn and the temperature raised to 75.0°C, calculate the new pressure of the gas remaining in the tank. (4 marks)

Question 4

(a) In Figure Q4(a), two charges q_1 and q_2, of magnitudes 30 μC and 50 μC respectively, are placed 40 cm apart in a vacuum. A third charge, $q_3 = +40$ μC, is placed between q_1 and q_2, and 10 cm from q_1. Find the force on q_3 if:

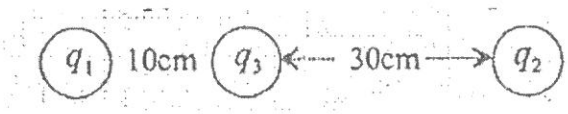

Figure Q4 (a)

(i) q_1 and q_2 are both positive. (6 marks)

(ii) If the distance between q_1 and q_3 increased to 20 cm, what would be the effect on the magnitude of force between q_1 and q_3? (3 marks)

(b) A parallel plate capacitor consists of two plates, each with area 200 cm^2, separated by a 0.40 cm air gap. (Given the permittivity of free space, $\varepsilon_o = 8.85 \times 10^{-12}$ Fm^{-1})

(i) Compute its capacitance. (2 marks)

(ii) If the capacitor connected across a 500 V source, determine the energy stored in it. (4 marks)

(iii) Find the value of electric field, $\boldsymbol{E}$ between the plates. (2 marks)

(c) (i) Explain how a *p*-type semiconductor formed. (2 marks)

(ii) Explain a *pn* junction. (2 marks)

(iii) What is the majority carrier in a *n*-type semiconductor? By what process the majority carriers produced. (2 marks)

(iv) Explain how covalent bonds formed. (2 marks)

Question 5

(a) A potential difference of 9.0 V is causing electrons to flow constantly through a steel wire so that 1.0×10^{20} electrons pass a point in the wire in 60 s. Calculate:

(i) the charge which passes the point in 60 s, (2 marks)

(ii) the electric current in the wire, and (2 marks)

(iii) the resistance of the wire. (2 marks)

(b) For a system of capacitors shown in Figure Q5 (b), find:

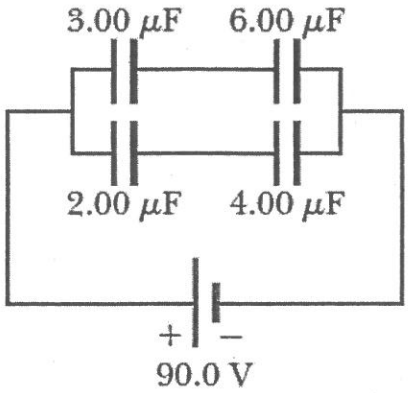

Figure Q5 (b)

(i) the equivalent capacitance of the system, (5 marks)

(ii) the charge on each capacitor, and (3 marks)

(iii) the potential difference across capacitor 3.00 μC. (2 marks)

(c) Figure Q5 (c) shows a proton moving with a speed of 1.0×10^6 ms^{-1} in a direction perpendicular to a uniform magnetic field, ***B*** of flux density 0.25 T out of the plane of this page. Given the mass of proton, $m_p = 1.67 \times 10^{-27}$ kg, charge of proton, $p = +1.60 \times 10^{-19}$ C.

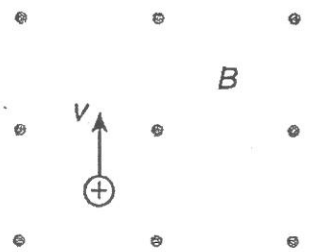

Figure Q5 (c)

(i) Show on a diagram the direction of the magnetic force, F on the proton. (1 marks)

(ii) Show on a diagram the subsequent path of the proton. (1 marks)

(iii) Calculate the radius of the circular path. (3 marks)

(iv) An electron moves with the same speed in the same direction in the magnetic field. State and explain two difference between the paths of the electron and the proton. (4 marks)

-THE END-

PHY1121/F/aug18/formatted